# Hall-Effect Sensor
# Model S0403

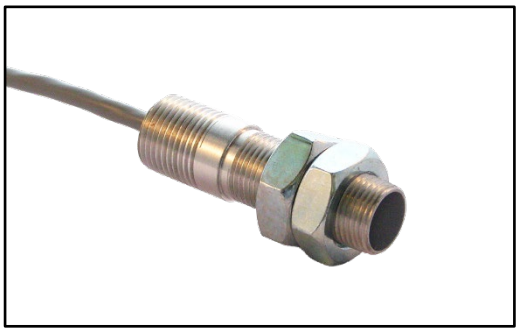

Model S0403, Hall-Effect Sensor

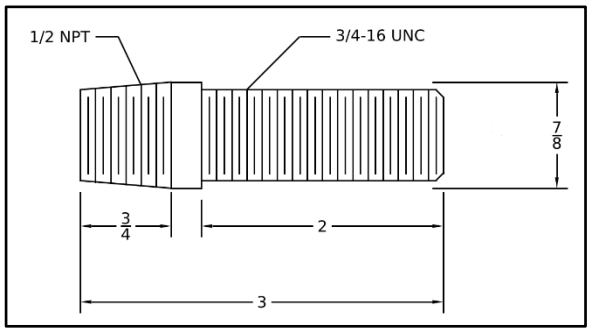


Dimensions (in inches) and Threads

## General Specifications

| | |
|---|---|
| **Operating Voltage Range:** 3-24 VDC | **Cable:** 3 Conductor, 20 AWG, Shielded |
| **Operating Temperature:** -40°F to 140°F | **Sensing Distance to Target (Gap):** |
| **Operating Frequency:** 25 kHz Maximum | Sold Separately: |
| **Digital Output Hall Effect Sensor Type:** | 1/8" to 3/8" using Phares HD Magnetic Disk. |
| 3 wire, sinking signal (NPN) standard. | 3/4” Maximum using Phares Standard Magnetic Disk. |
| **Output Signal:** Square Wave | 3/4" maximum using Magnet Part No. SM-100 |
| **Supply Current:** 6 mA | 1-1/4” maximum using Magnet Part No. RM-100 |
| **Output Current:** 20 mA Max. | **Conforms to the following standards**: |
| **Vibration Tolerant** | CAN/CSA C22.2 No. 61010-1:2012 |
| **Magnetic Pole Detect:** | UL 61010-1:2012 |
| North and South (Positive and Negative field) | EN 61010-1:2012 |
| **Housing Material:** Aluminum | IP68 |

## Part Number Chart

S0403- X  Sample Part Nos. S0403-06, S0403-10

| Model No. | Temperature Range | X - Cable Length |
|---|---|---|
| S0403 | -40° F to 140° F | 6 Ft, 10 Ft |

## Options

- Custom Cable Length
- Custom Sensor Housing Length
- Sourcing (PNP) available.
- Internal pull-up resistor